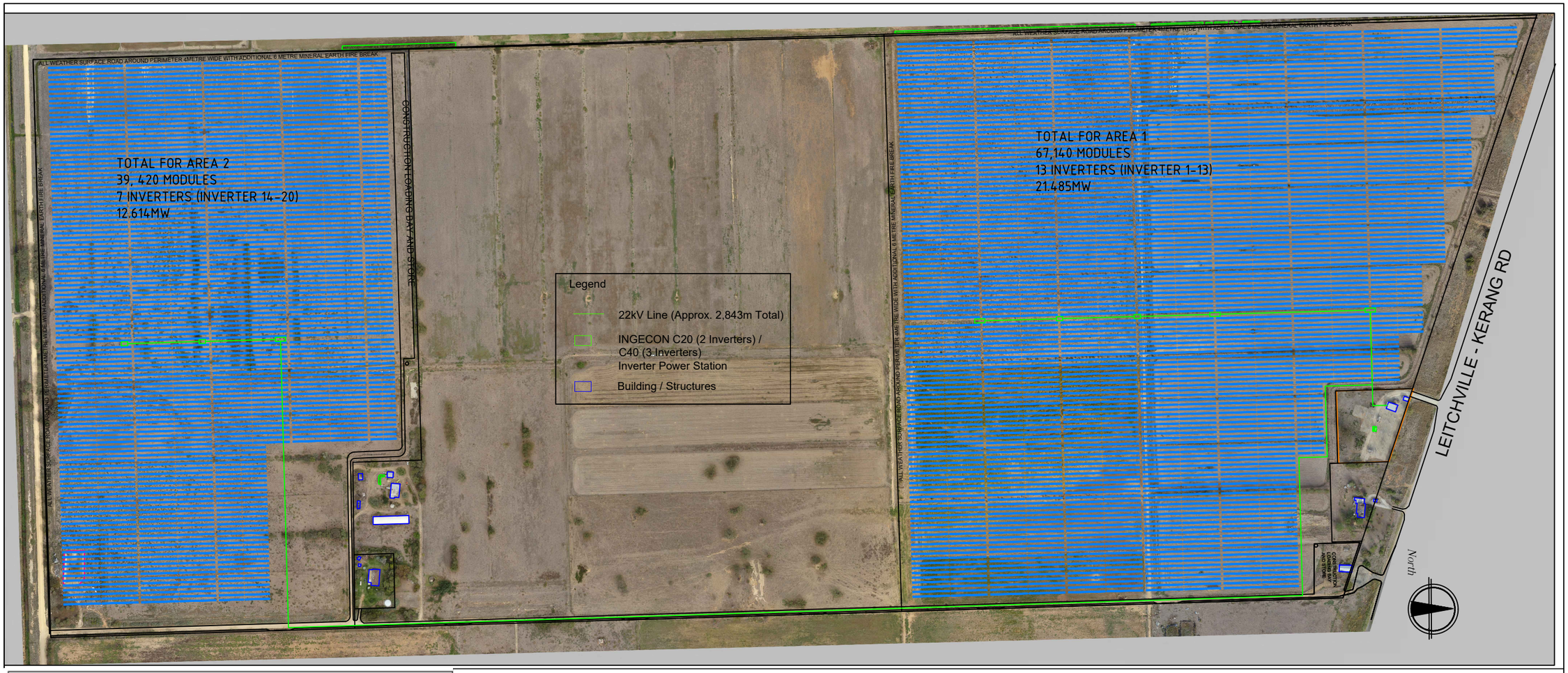

ELEVATION VIEW

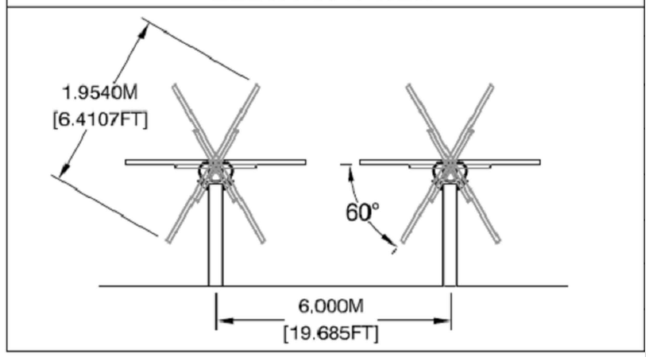

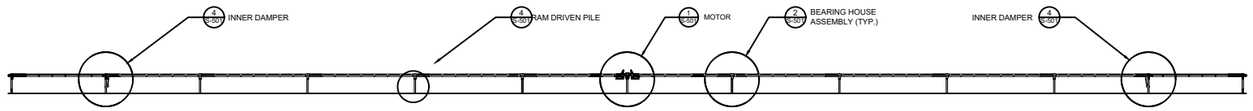

2 INTERIOR TRACKER - ELEVATION VIEW
SCALE: NTS

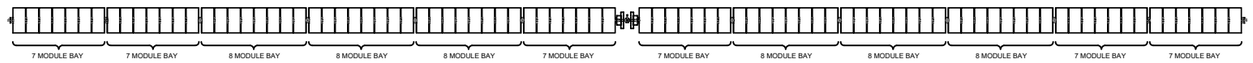

3 TYPICAL TRACKER SPACING
SCALE: NTS

Grey Box Energy Field

Grey Box Energy Field Pty. Ltd.
132 Cremorne St,
Cremorne VIC 3121, Australia

REV.	DATE	DESCRIPTION	DES.	DRW.	APR.
A	25/03/2017	PRELIMINARY	PL	PL	*

PROJECT TITLE : GREY BOX ENERGY FIELD

PROJECT LOCATION : 909 KERANG LEITCHVILLE ROAD, HORFIELD

DRAWING TITLE : SOLAR FARM LAYOUT

REVISION B

JOB NO: CHN-001 SCALE: 1:6000

DRAWING NO.: 001-230225-001

This print and its copyright are the property of GREY BOX ENERGY FIELD PTY LTD

SHEET: 1 of 1 SIZE: A1